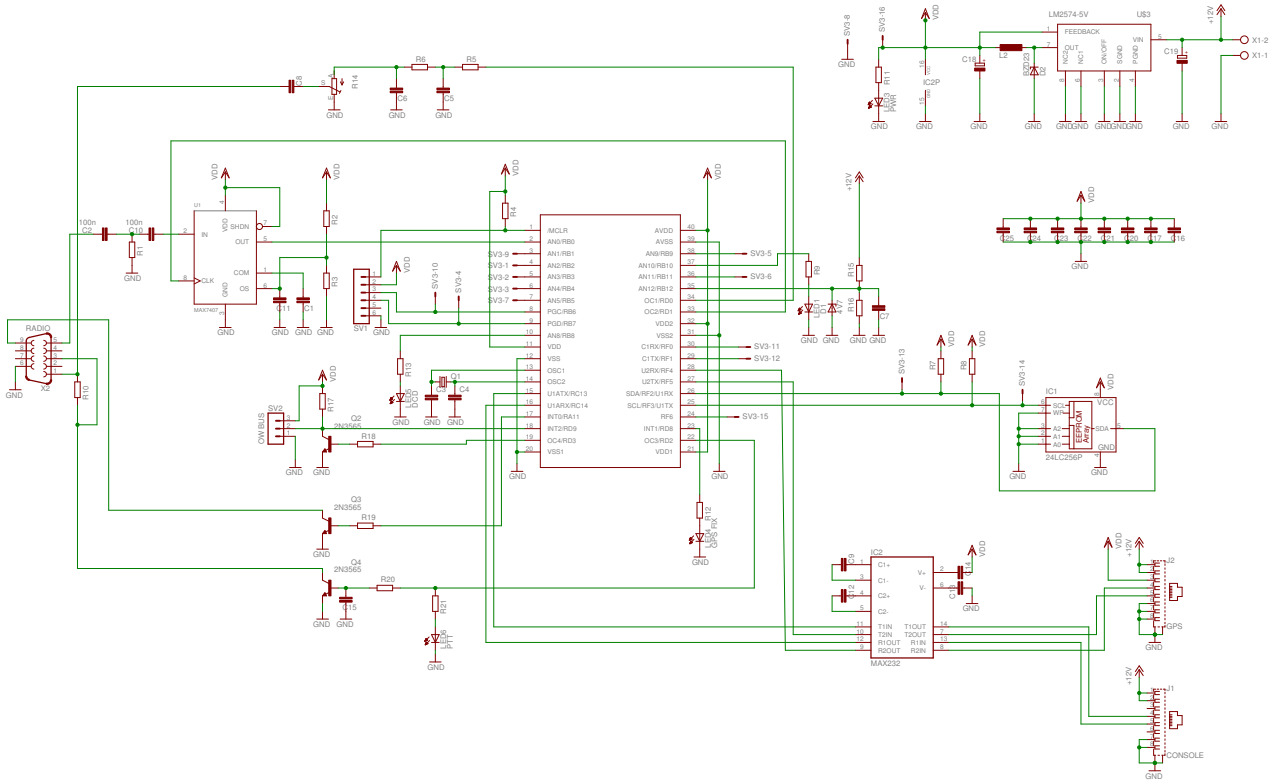

11-10-24 18:52 f=0.41 /dataraid/verox/eagle/VeRoX_Tracker/tracker_dspic30F413.sch (Sheet: 1/1)